CYLINDER HEAD ASSY

NO.	PART CODE	ENGLISH DESCRIPTION	QTY
1	100055588-0006	Bolt, M6×20	4
2	100056258-0002	Cylinder End Loam Cake	1
3	100061486	Seal Ring,Of Upper Cover Cylinder Head	1
4	100032827-0001	Bolt, M6×105	2
5	100106562	Washer,Ø6.2×1×Ø10	3
6	100123471-0001	Screw, M6×16	1
7	100061405	Rocker Axle Dead Plate	1
8	100100535-0006	Nut	4
9	100106576	Washer,Ø8.5×2×Ø18	4
10	100100867	Dowel Pin,Ø8×12×Ø6.3	1
11	100107798	O-Ring,Ø6.5×1.8	1
12	100104149	Spark Plug	1
13	100056259-0002	Cylinder End Combination	1
14	100010835-0001	Bolt, M6×10	1
15	100100441-0005	Bolt,M6×32	2

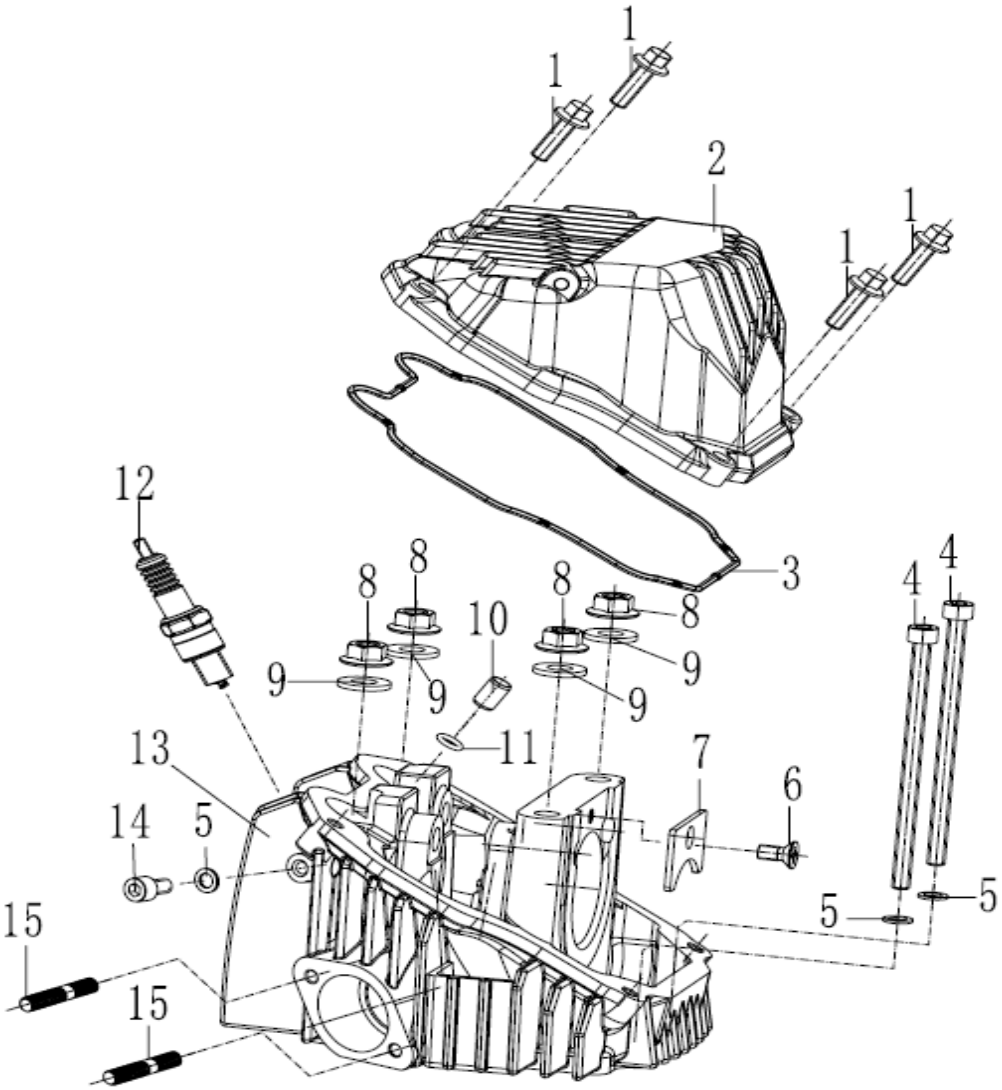

CYLINDER ASSEMBLY

NO.	PART CODE	ENGLISH DESCRIPTION	QTY
1	100010557	Pin,Ø10×14	4
2	100208887	Gasket Assy Cylinder Head	1
3	100061501-0001	Cylinder Block Assembly	1
4	100106579	Washer,Ø10×1.2×Ø16	1
5	100100418-0001	Bolt,M10×16×1.25	1
6	100208605	Gasket Cylinder Block	1
7	100208743	Gasket Tensioner	1
8	100200521-0001	Chain Tensioning Wheel	1
9	100011531-0007	Bolt, M6×18	2

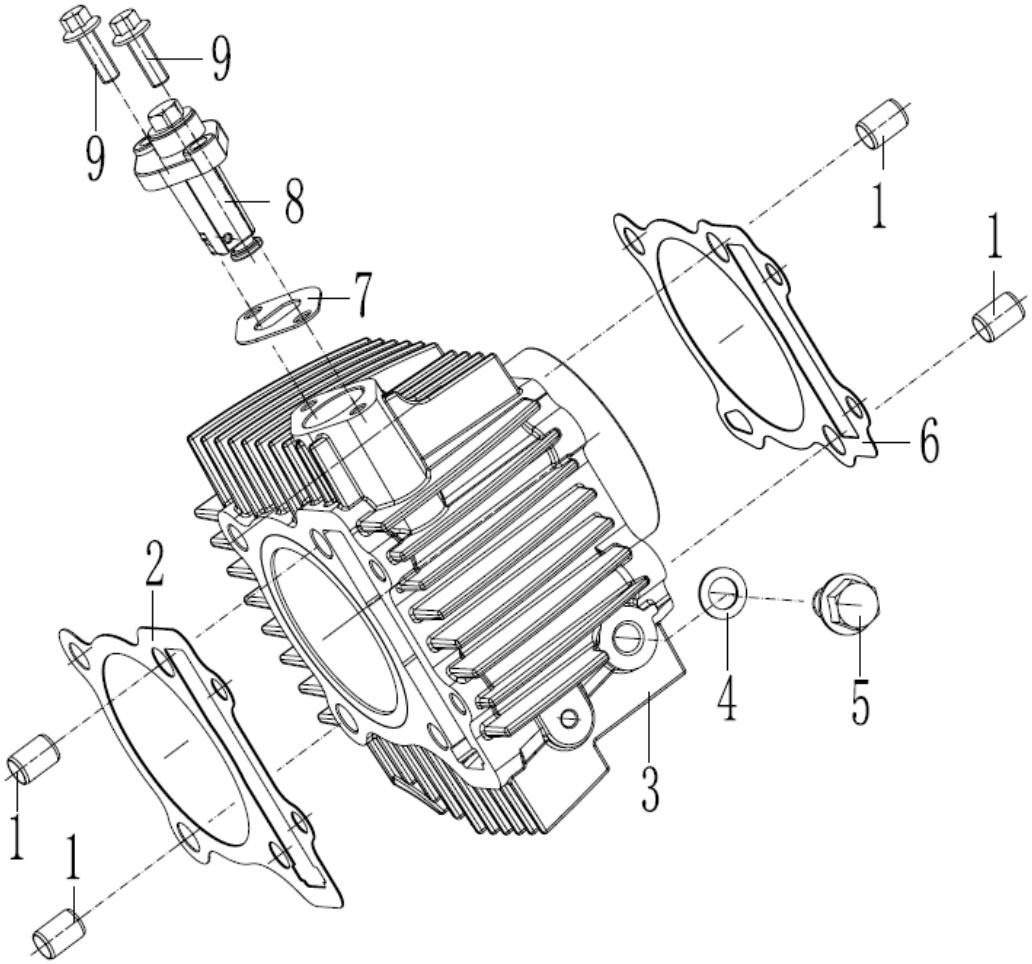

VALVE MECHANISM

NO.	PART CODE	ENGLISH DESCRIPTION	QTY
1	100105320	Valve Locker	4
2	100200691	SpRing,Seat	2
3	100076779	Inner SpRing,Assy	2
4	100105334	Seal Valve Stem	2
5	100200702	Outer Valve SpRing,Retainer	2
6	100061495	Exhaust Valve	1
7	100061496	Intake Valve	1
8	100061498	Centrifugal Mass Ass	1
9	100057814	Decompression SpRing,Of Camshaft	1
10	100010837-0002	Bolt, M6×16	2
11	100057815	Limit Plate Reducting Valve	1
12	100105059	Timing Driven Sprocket	1
13	100061326	Gamp Shaft Comp	1
14	100200333	Rocker Arm Parts	2
15	100061404	Rocker Axle Shaft Sleeve	1
16	100061403	Rocker Axle	1
17	100061402	Rocker Axle	1
18	100105108	Sproket Chain	1

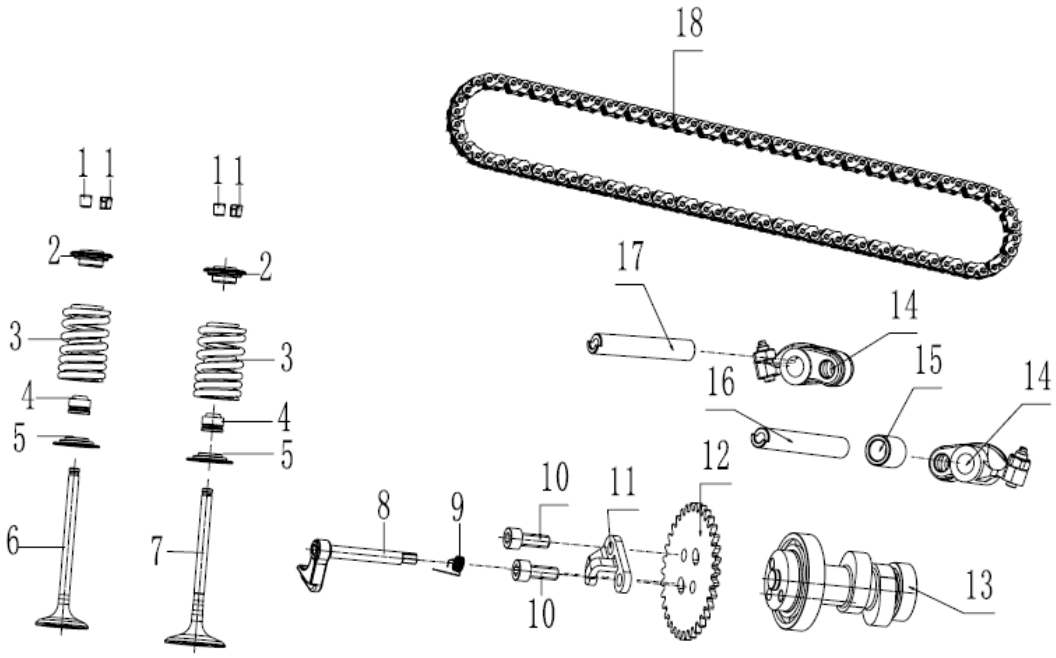

RIGHT CRANKCASE COVER

NO.	PART CODE	ENGLISH DESCRIPTION	QTY
1	100032994	Retaining Ring, 20	1
2	100100867	Dowel Pin,Ø8×12×Ø6.3	2
3	100104807	Oil Seal 12×20×5	1
4	100203079	Pushing Rod Clutch	1
5	100712781	Gasket R.Crankcase Cover	1
6	100104760	Oil Seal 10×17×5	1
7	100106292-0001	Controlling Arm Assembly Clutch	1
8	100203124	Clutch Controlling Arm Spring	1
9	100055897-0003	Cover Comp Right Crankcase	1
10	100104740	Oil Seal 26×16×7	1
11	100033089-0005	Bolt, M6×90	1
12	100011540-0007	Bolt, M6×50	2
13	100011536-0002	Bolt, M6×30	2
14	100101320	Oil Lelve Sight Window	1
15	100203112-0001	Holder Cliutch Cable	1
16	100100015	SpRing,Oil Fine Filter	1
17	100200036	Oil Filter	1
18	100011546-0001	Bolt, M6×115	1
19	100011542-0001	Bolt, M6×60	2
20	100300384	O-Ring,Ø38.6×2.6	1
21	100204438-0002	Cap Oil Filter	1
22	100011531-0007	Bolt, M6×18	2
23	100062064	Oil Cooler Comp	1
24	100104873	Oil Ruler Assy	1
25	100106578	Washer,Ø10×1×Ø14	12
26	100201818	Furel Pipe	1
27	100100350-0001	Bolt,M10×1.25	4
28	100073528	Oilpipe Assy	2

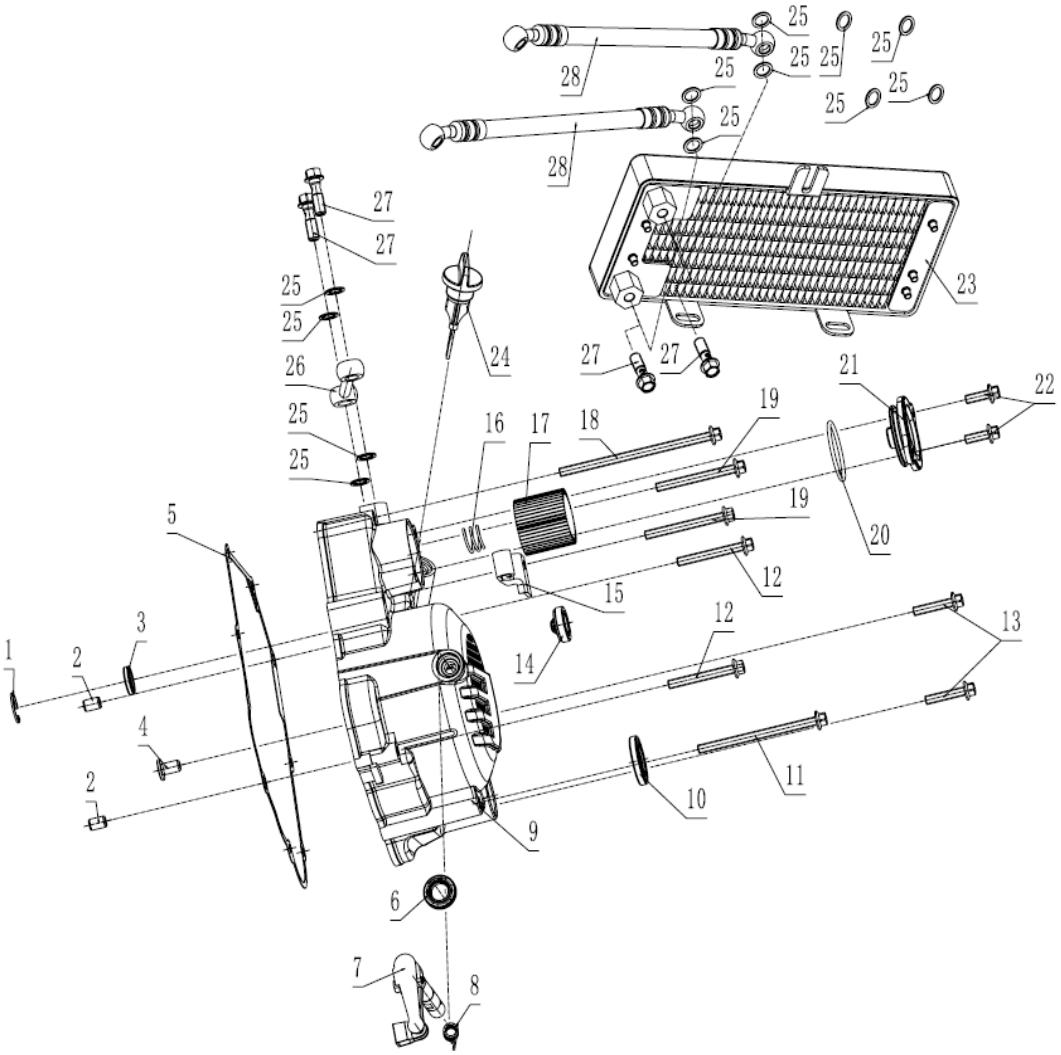

LEFT CRANKCASE COVER

NO.	PART CODE	ENGLISH DESCRIPTION	QTY
1	100100867	Dowel Pin,Ø8×12×Ø6.3	2
2	100055589-0006	Bolt, M6×16	1
3	100067184	Gasket L Cover	1
4	100103067	Fixing Plate Magneto Cable	1
5	100103059-0003	Cap Small View Hole	1
6	100010074	O-Ring,Ø13.2×2.65	1
7	100055896-0003	Front Part,L.Crankcase Cover	1
8	100011534-0002	Bolt, M6×25	1
9	100011537-0002	Bolt, M6×35	3
10	100107731	O-Ring,Ø27.4×2.65	1
11	100103062-0003	Cap Big View Hole	1
12	100055587-0006	Bolt, M6×28	2
13	100202216-0080	Back Part L.Crankcase Cover	1

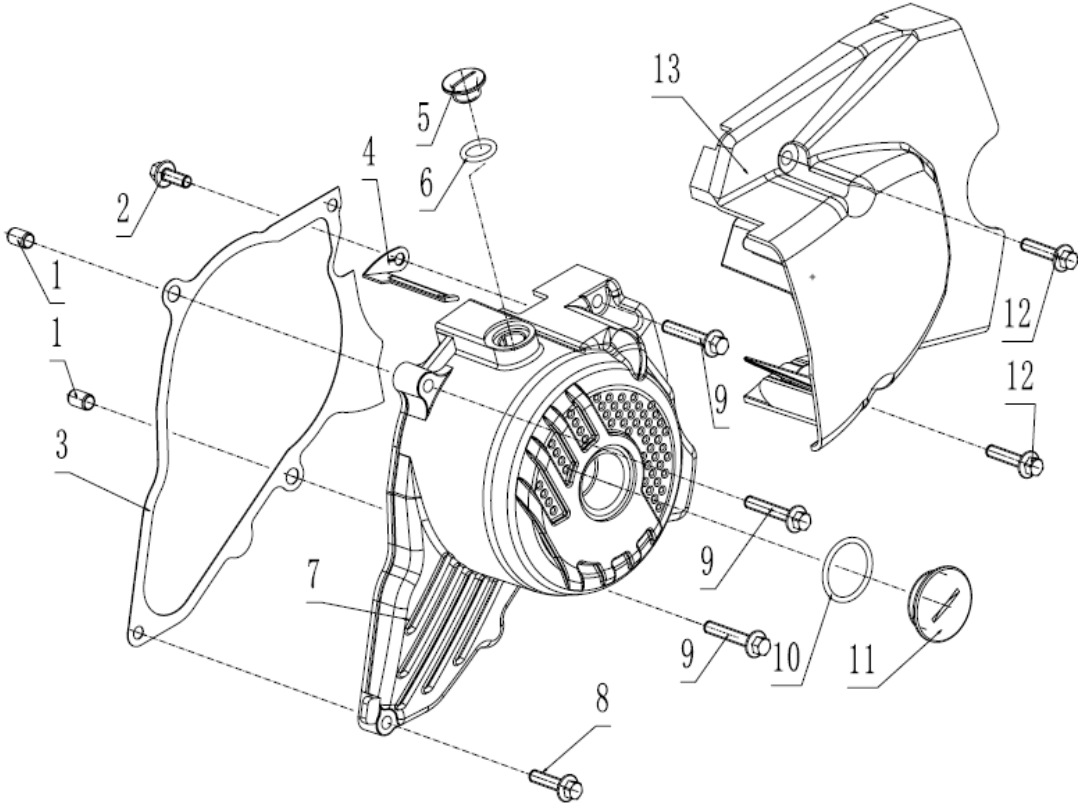

CLUTCH ASSY

NO.	PART CODE	ENGLISH DESCRIPTION	QTY
1	100301454	Screw	6
2	100107948	Clutch Driven Gear Cover	1
3	100107896	Clutch Dash Pot Slipcover	6
4	100057812	Gear	1
5	100057811	Outer Cover	1
6	100103340	Washer	1
7	100103350	Fixing Ring,Clutch	1
8	100301365	Pressure Plate Clutch	1
9	100103413	Drive Friction Disk	6
10	100103420	Outer Friction Disk A	5
11	100301331	Center Sleeve Clutch	1
12	100103344	Dish Washer,Clutch	1
13	100100514	Lock Nut Clutch	2
14	100103393	SpRing,Clutch	4
15	100301352	End Cover Clutch	1
16	100011267-0003	Bolt, M6×22	4
17	100031716	BeaRing,6000	1
18	100071360	Clutch Assy	1
19	100103481	Primary Drive Gear	1
20	100202891	Dish Washer,Clutch	1

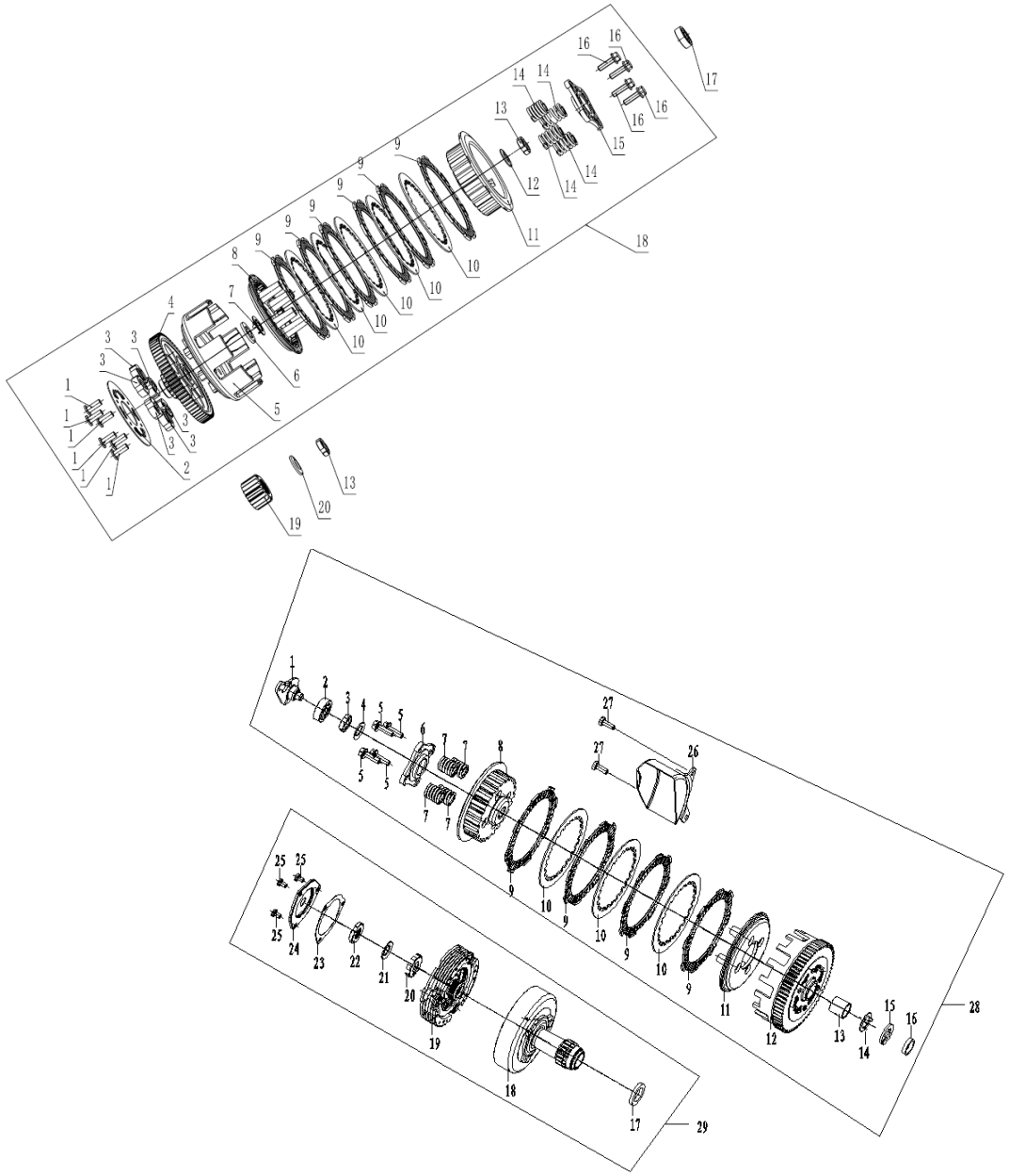

OIL PUMP

NO.	PART CODE	ENGLISH DESCRIPTION	QTY
1	100123474-0001	Screw, M6×40	2
2	100123473-0001	Screw, M6×35	1
3	100011168-0003	Bolt, M5×12	1
4	100010886	Washer, Ø6	1
5	100100164	Oil Pump Cover	1
6	100204609	Outer Rotor Oil Pump	1
7	100204584	Inner Rotor Oil Pump	1
8	100032893	Pin, Ø3×16	1
9	100100185	Oil Pump Body	1
10	100011110	Retaining Ring, 5	1
11	100204491	Shaft Oil Pump	1
12	100100212	Pin	1
13	100204526	Oil Pump Gear Ass.	1
14	100208730	Gasket Oil Pump	1
15	100100867	Dowel Pin,Ø8×12×Ø6.3	2
16	100100097	Drive Gear Oil Pump	1
17	100100055	Oil Pump Assy	1

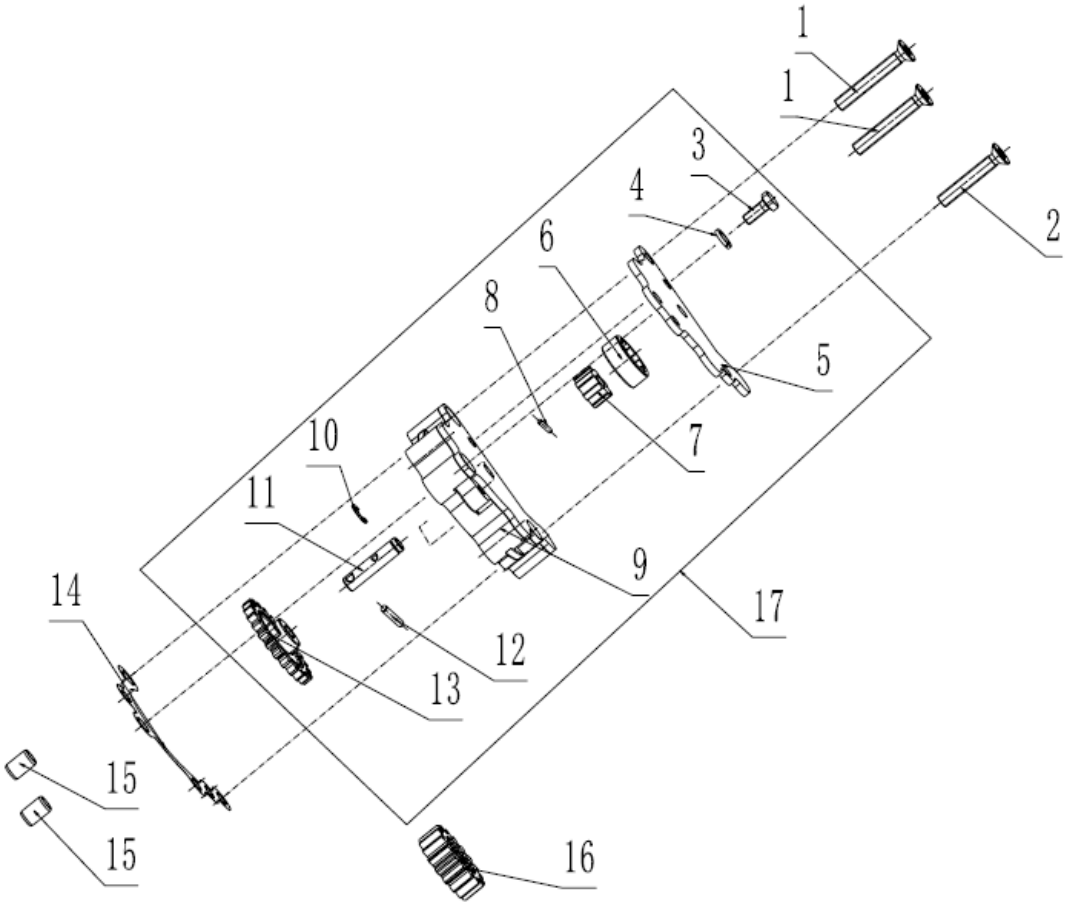

LEFT CRANKCASE

NO.	PART CODE	ENGLISH DESCRIPTION	QTY
1	100031958-0007	Bolt, M6×55	1
2	100011543-0001	Bolt, M6×65	1
3	100031959-0007	Bolt, M6×70	3
4	100031960-0007	Bolt, M6×80	2
5	100061492	Assembly Chain Protect Plate	1
6	100061491	Assembly Guide Plate	1
7	100100000-0005	Clip High Voltage Wire	1
8	100104647	Oil Seal 11.6×24×10	1
9	100031851-0004	Screw, M6×12	1
10	100104696	Oil Seal 17×29×5	1
11	100104485	Gearshift Switch Pressing Plate	1
12	100100425-0001	Bolt	1
13	100200477	Tension Plate Assy	1
14	100200500	Guide Plate Chain	1
15	100123471-0001	Screw, M6×16	2
16	100011171-0002	Bolt, M6×12	1
17	100103247	Plate Start Clutch	1
18	100060674	Disk Insulator	1
19	100107798	O-Ring,Ø6.5×1.8	2
20	100055898-0003	Left Crankcase Block	1
21	100010557	Pin,Ø10×14	2
22	100100267	Cylinder Stud Bolt A	2
23	100208717	Gasket Crankcase	1
24	100100973	BeaRing,(6001)	1
25	100100988	BeaRing,(6203)	1
26	100102977	Pipe Assy	1

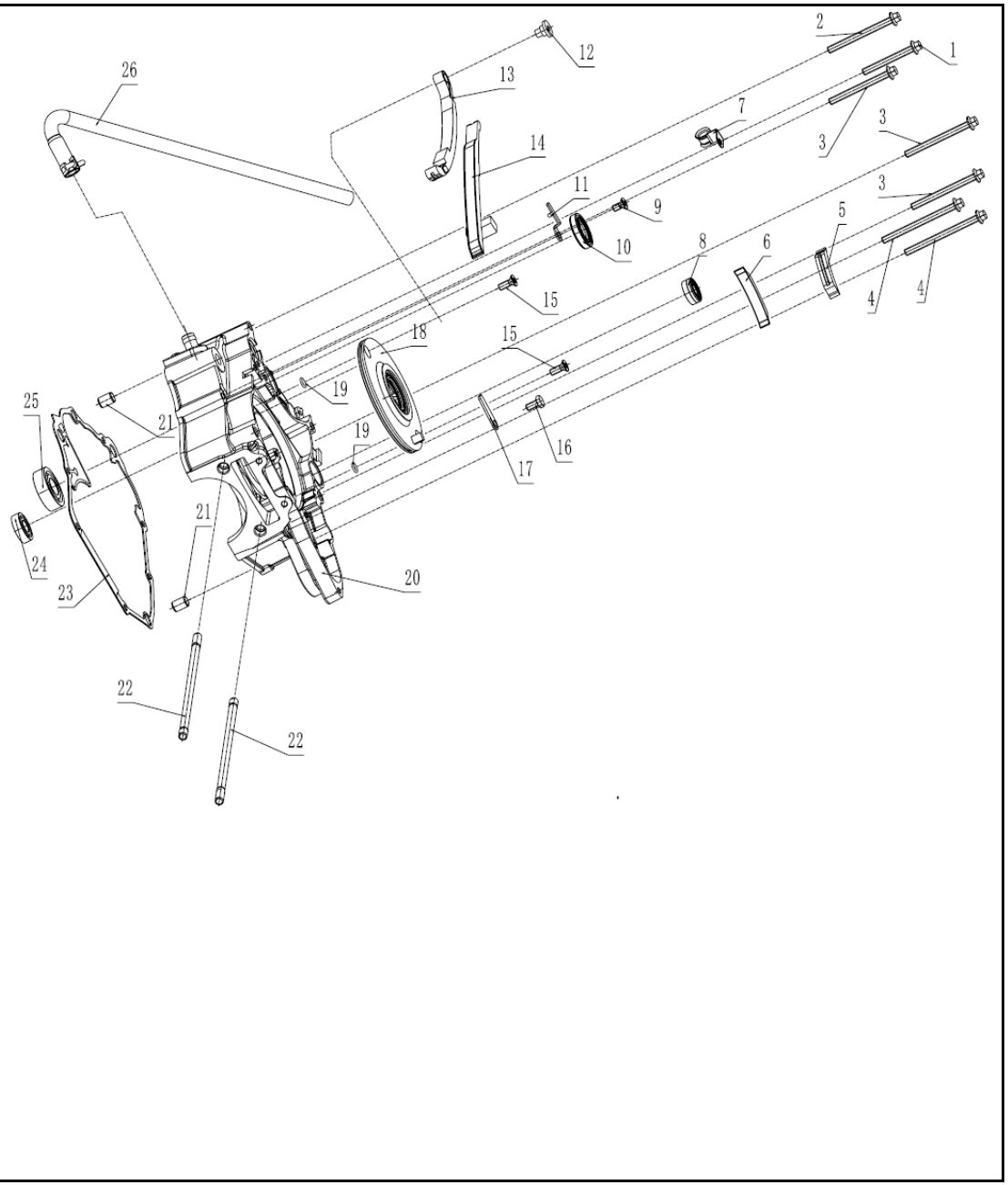

RIGHT CRANKCASE

NO.	PART CODE	ENGLISH DESCRIPTION	QTY
1	100100392	Bolt Return Springn Fixing,8×11	1
2	100104941	Strainer Oil Filter	1
3	100100320	Cylinder Stud Bolt B	2
4	100106548	Washer,Ø12.1×2×Ø20	1
5	100100331-0006	Oil Drain Plug	1
6	100055899-0002	Right Crankcase Block	1
7	100715964	Needle BeaRing,(Nk16×27×12)	1
8	100100988	BeaRing,(6203)	1

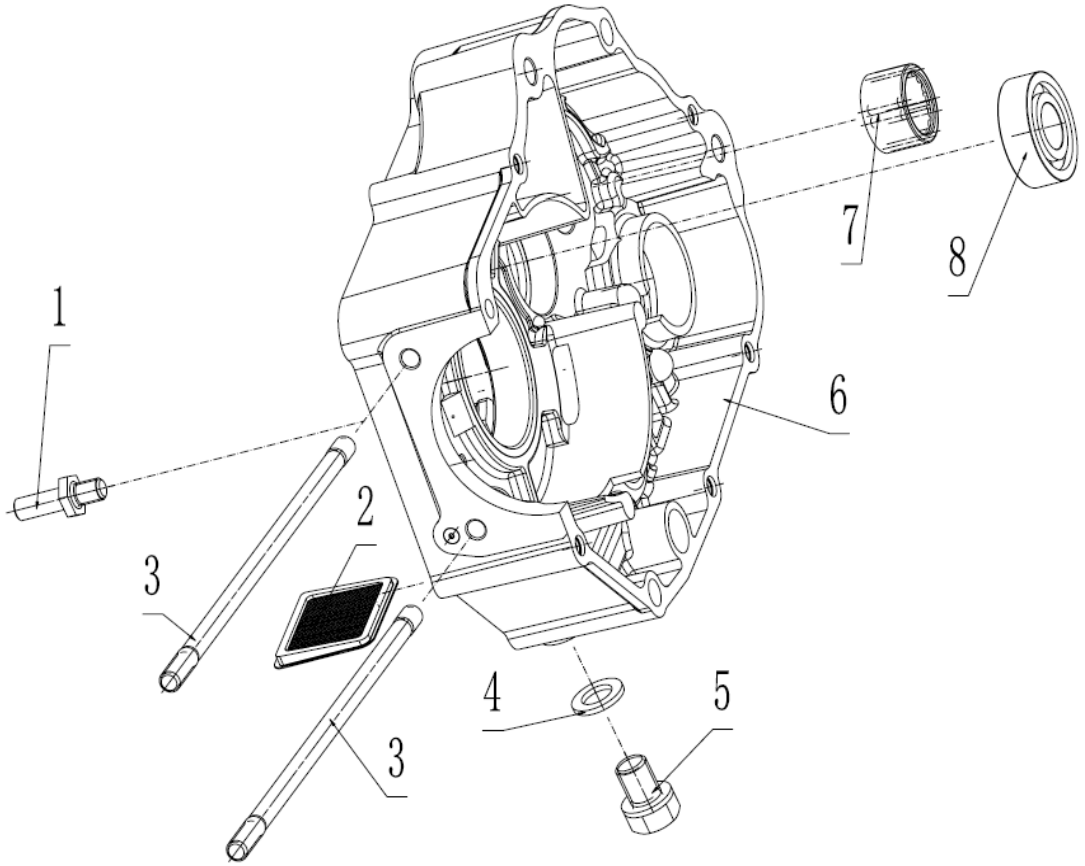

CRANKSHAFT CONNECTING-ROD ASSY/PISTON			
NO.	PART CODE	ENGLISH DESCRIPTION	QTY
1	100303132	Hub Dump Chain Sprocket	1
2	100101108	BeaRing,(63/22_P63)	2
3	100075872	Semicircular Key	1
4	100071511	Connecting Rod Comp	1
5	100100584	Check Ring Piston Pin	2
6	100101535	Pin,Piston	1
7	100061500	Piston	1
8	100071537	Oil Loop	2
9	100071538	Oil Ring	1
10	100067475	Piston Loop	1
11	100067474	Piston Loop	1
12	100064591	Piston Ring,Comp	1
13	100075033	Crankshaft Connecting-Rod Assy	1

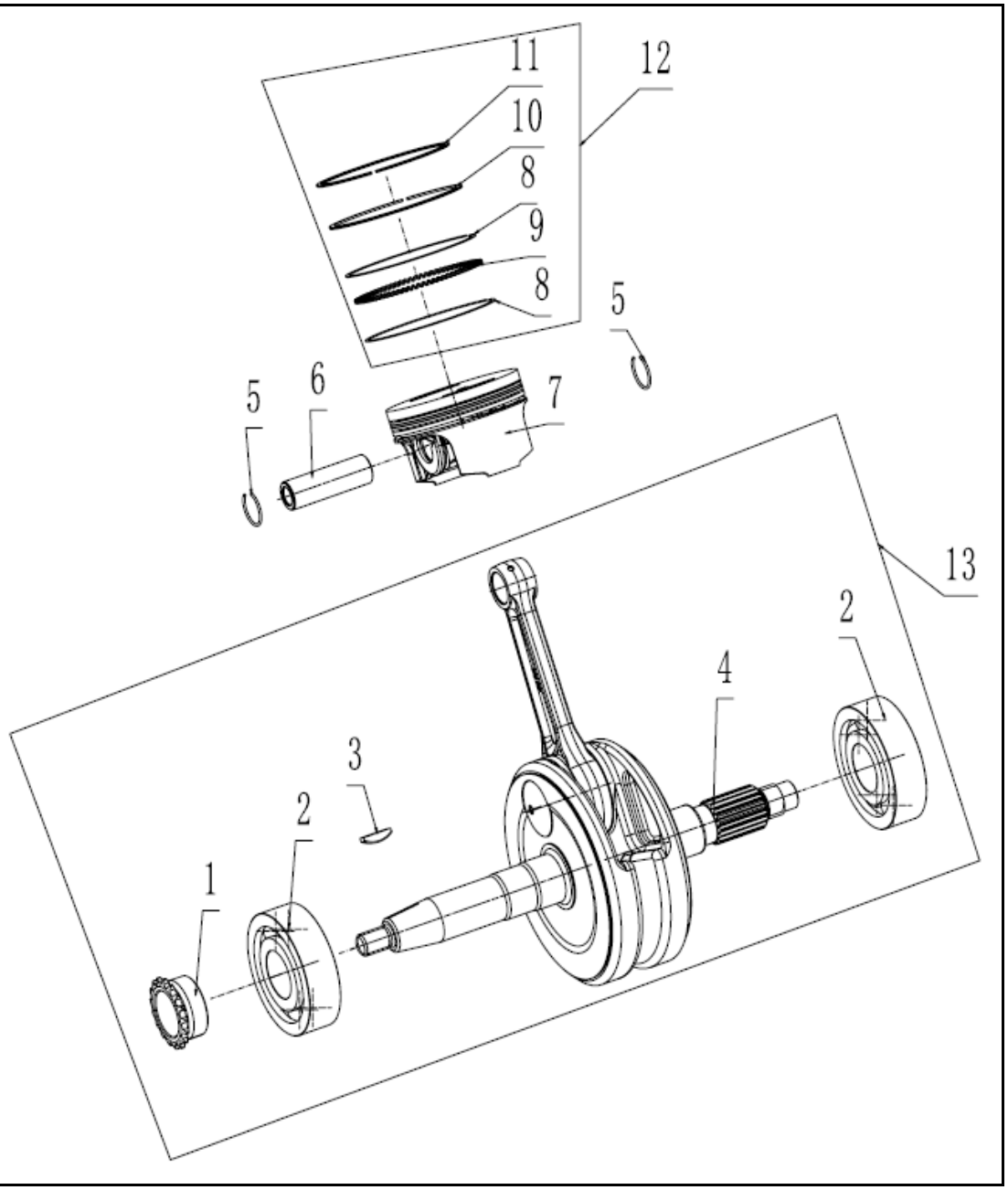

TRANSMISSION MAIN,COUNTER SHAFT			
NO.	PART CODE	ENGLISH DESCRIPTION	QTY
1	100011098	Retaining Ring, 15	1
2	100715963	Washer,Ø16.1×0.5×Ø23	2
3	100715965	Gear	1
4	100715966	Washer,Ø16.1×0.5×Ø26	1
5	100062010	Countershaft Second Gear	1
6	100100628	Check Ring,Ø18.5	3
7	100304548	Washer	3
8	100062012	Countershaft Four Speed Gear	1
9	100062011	Countershaft Third Gear	1
10	100715962	Countershaft Dabber	1
11	100062013	Countershaft Five Speed Gear	1
12	100062009	Countershaft First Gear	1
13	100715961	Countershaft Combination	1
14	100103801	Drive Sprocket	1
15	100203657	Fixing Plate Drive Sprocket	1
16	100031911-0004	Bolt, M6×10	2
17	100062016	Principal Axis Second Gear	1
18	100103645	Washer,15.5(17.2)×1.2×21	2
19	100103657	Circlip	2
20	100062017	Principal Axis Three Four Gear	1
21	100062018	Countershaft Five Speed Gear	1
22	100062015	Principal Axis Dabber	1
23	100062014	Principal Axis Combination	1
24	100715960	Advocate Countershaft	1

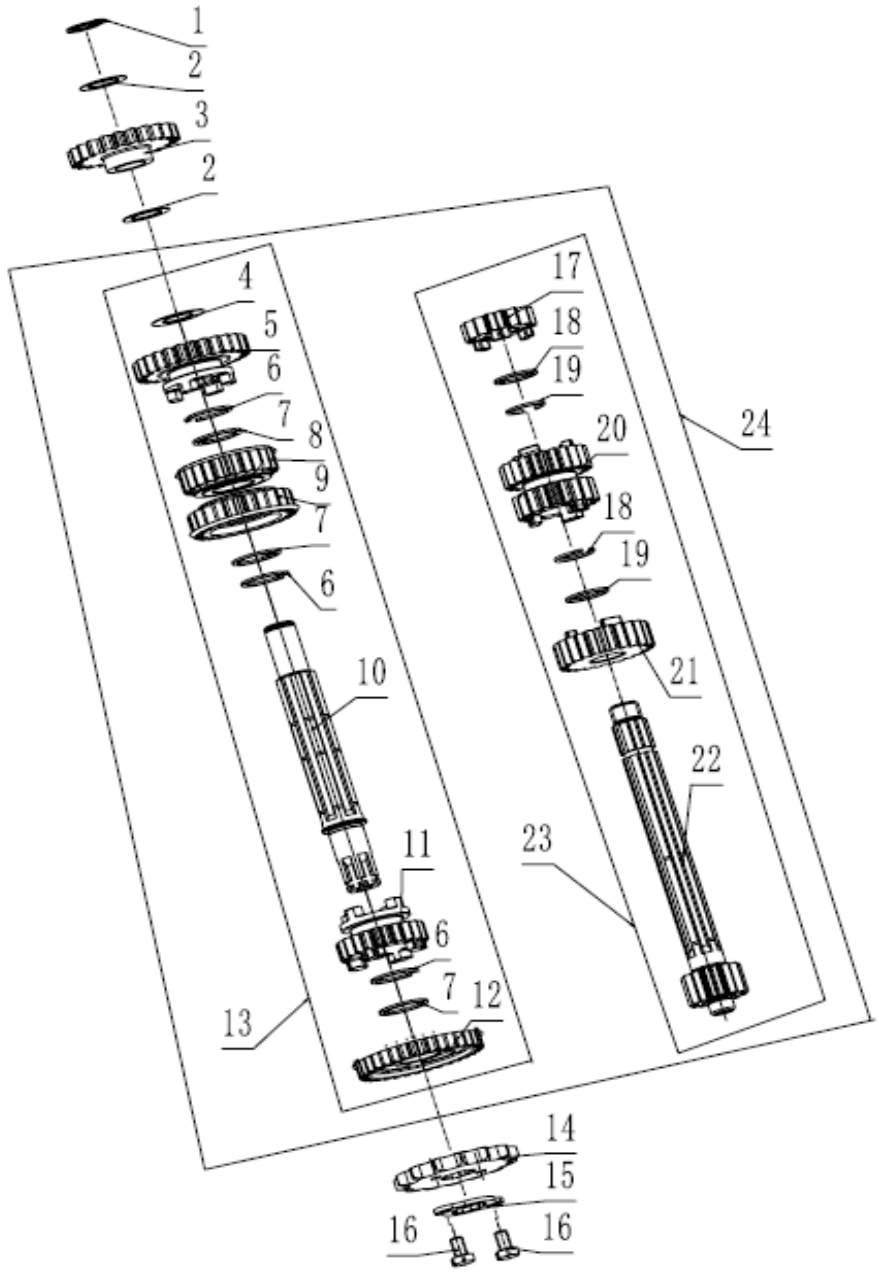

KICK STARTING SHAFT ASSEMBLY

NO.	PART CODE	ENGLISH DESCRIPTION	QTY
1	100106512	Washer,Ø16.1×1×Ø24	1
2	100100596	Circli,Ø18.5×1.2×Ø22.1	3
3	100106524	Washer,Ø20.1×1×Ø27	2
4	100105775	Gear Kick Starter	1
5	100303345	Starting Ratchet	1
6	100105786	SpRing,Kick Starting Ratchet Wheel	1
7	100063242	Pivot Kick Starting Shaft	1
8	100105790	SpRing,Support	1
9	100105736	Seat SpRing,Kick Starting Shaft	1
10	100303320	Return SpRing,Kick Starting Shaft	1
11	100303317	Seat SpRing,Kick Starting Shaft	1
12	100106518	Washer,Ø17.2×1×Ø24	1
13	100100595	Circli,Ø15.5×1.2×Ø19	1
14	100106508	Washer,Ø14.1×1×Ø22	1
15	100011174-0004	Bolt, M6×20	2
16	100303357	Guide Plate	1
17	100061494	Kick Starting Shaft Assembly	1
18	100303421	Start-Up Bar Comp	1

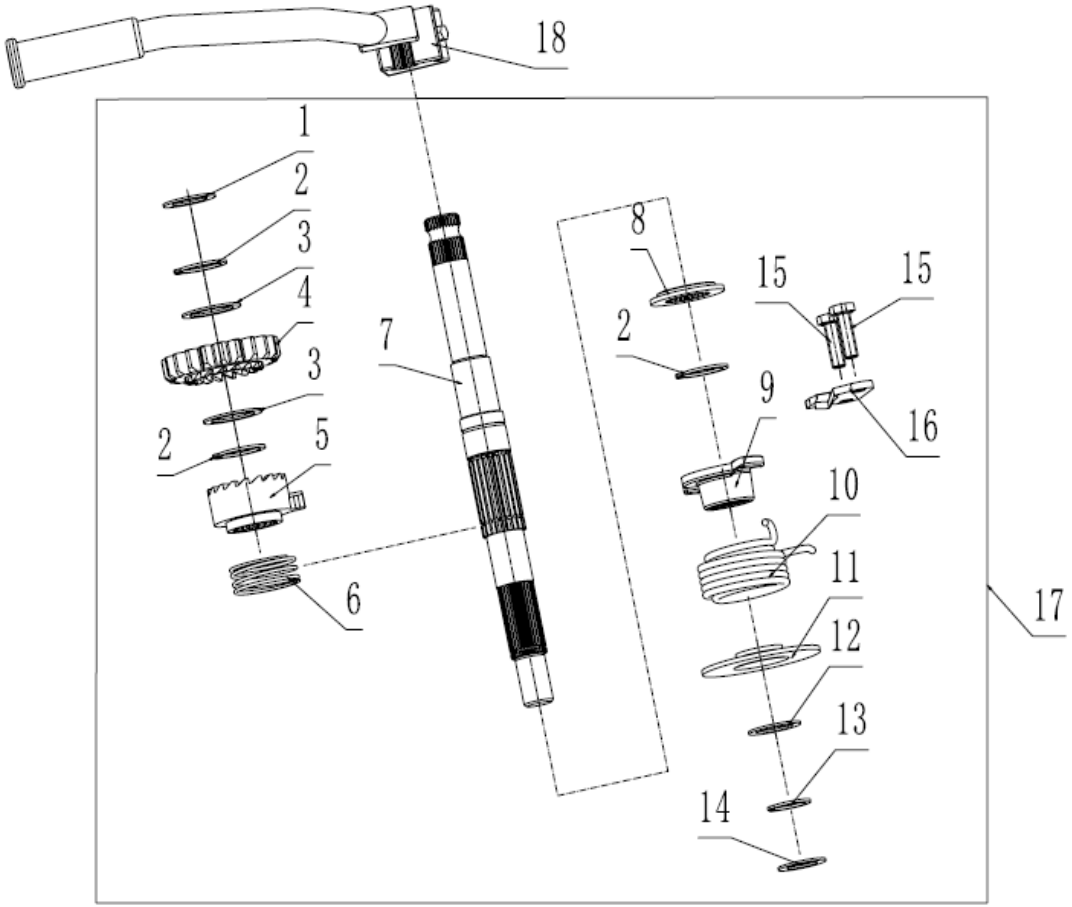

GEARSHIFT MECHANISM

NO.	PART CODE	ENGLISH DESCRIPTION	QTY
1	100203931	SpRing, Locating Plate	1
2	100148970	Locating Plate Assy	1
3	100208389-0002	Gearshift Switch Lamp	1
4	100100466-0002	Screw	1
5	100104486	Contact Cearindication	1
6	100062847	Gearshift Fork	2
7	100103891	Pin Ø3×8.5	3
8	100103892	Clip,Spring	3
9	100062848	Gearshift Fork	1
10	100062905	Gearshift Drum	1
11	100100901	Pin Ø4×13	5
12	100100887	Pin Ø3×8.5	2
13	100203854	Press Plate Of Gearshift Drum	1
14	100062846	Stopping Plate	1
15	100010837-0002	Bolt M6×16	1
16	100712677	Gearshift Drum Comp	1
17	100204006	Gearshift Shaft	1
18	100071615	Gearshift Shaft Comp	1
19	100104000	Sleeve Of Gearshift Lever Comp	1
20	100103969	Return Spring	1
21	100071614	Shift Arm Group	1
22	100203866-0001	Gearshift Lever Comp	1
23	100712676	Cover Board	1

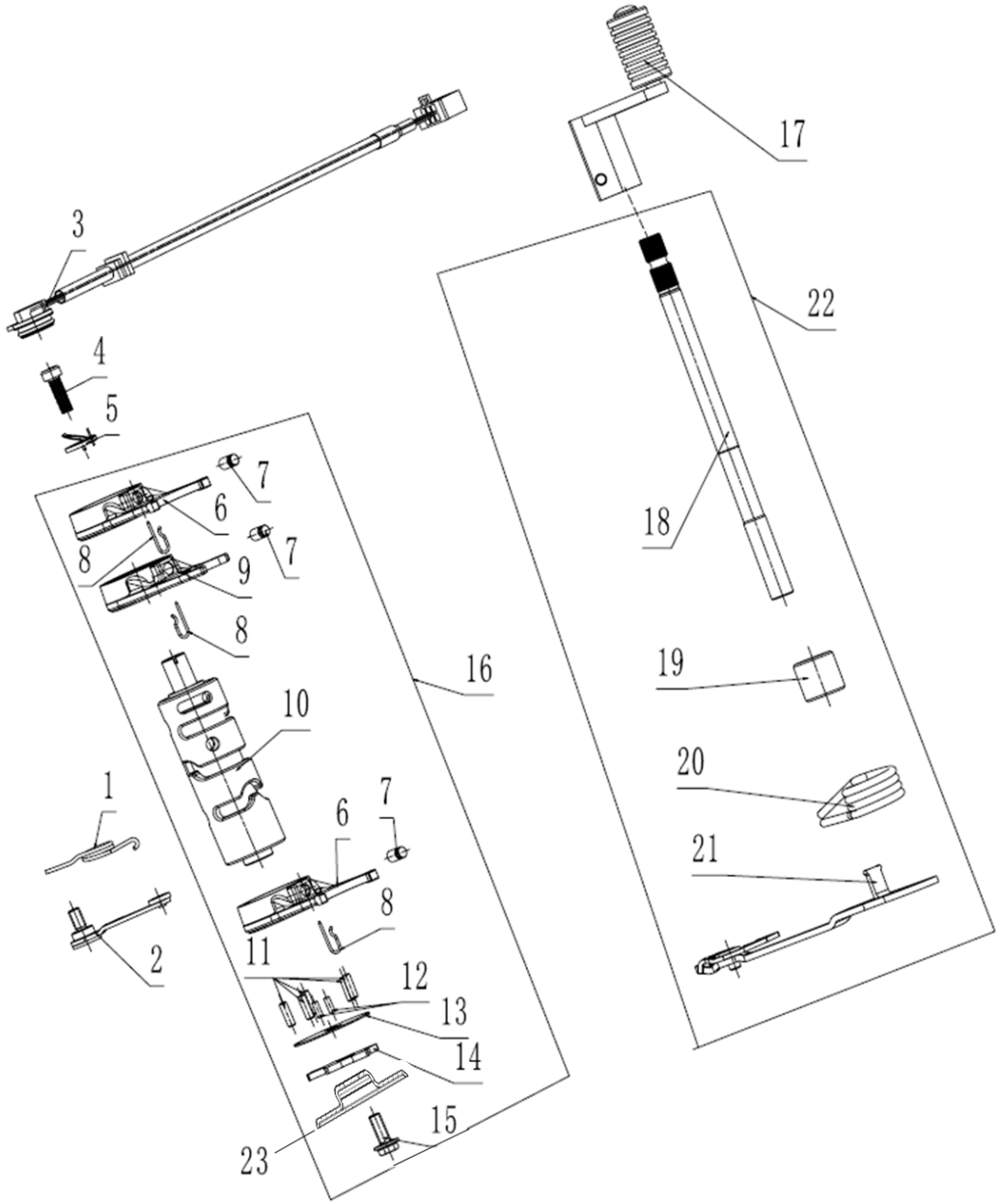

MAGNETO COMP

NO.	PART CODE	ENGLISH DESCRIPTION	QTY
1	100084478	Rotor Assy, Magneto	1
2	100204698-0001	Nut	1
3	100011168-0003	Bolt, M5×12	2
4	100011534-0002	Bolt, M6×25	2
5	100084477-0001	Stator Assy, Magneto	1

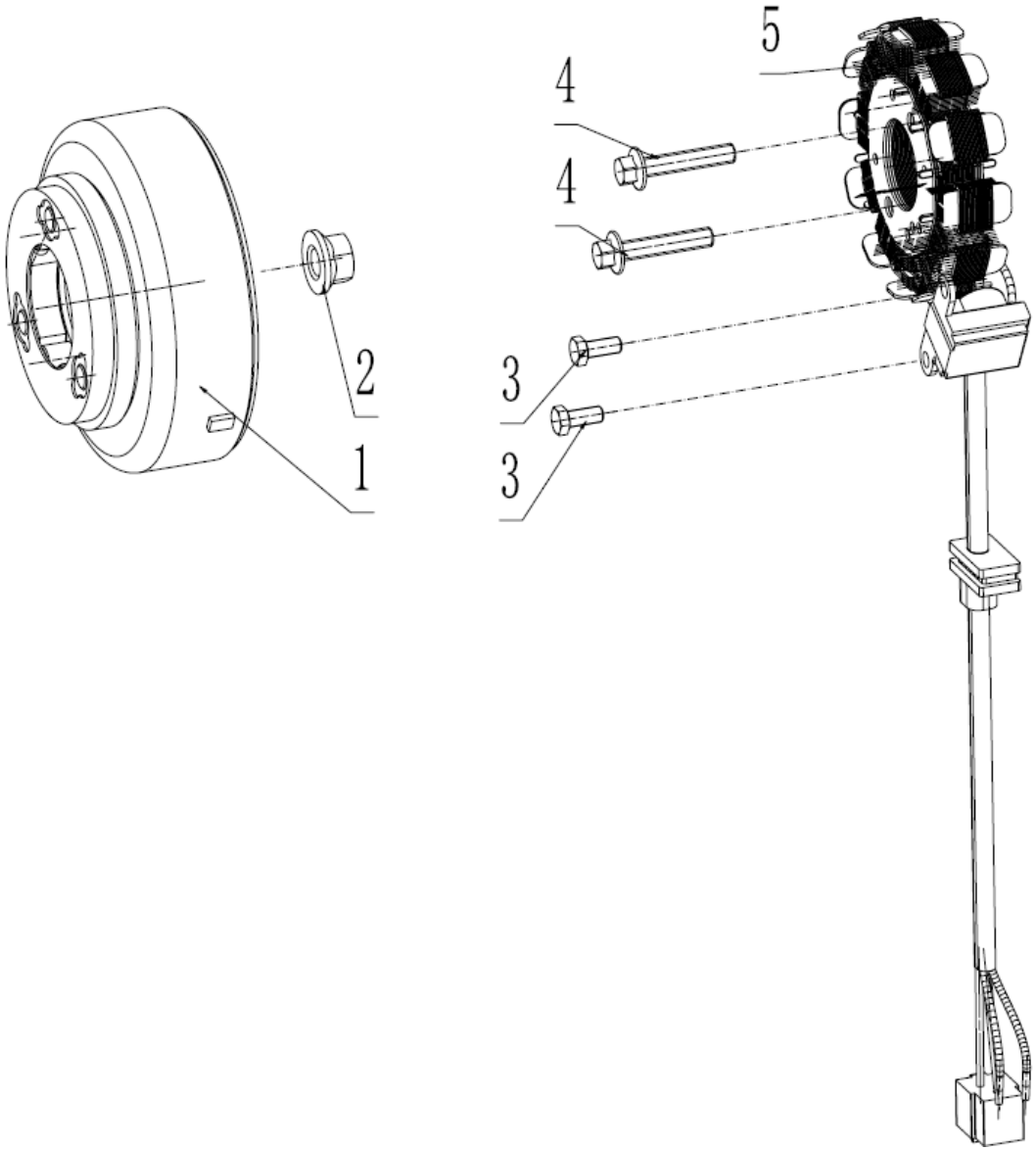

ELECTRIC STARTING MECHANISM

NO.	PART CODE	ENGLISH DESCRIPTION	QTY
1	100033003	Retaining Ring, 11	1
2	100061487	Sprocket	1
3	100715602	Starting Motor Drive Chain	1
4	100075032	Plate Gear Assy	1
5	100061488-0001	Starting Motor Assy	1
6	100011533-0005	Bolt, M6×22	2

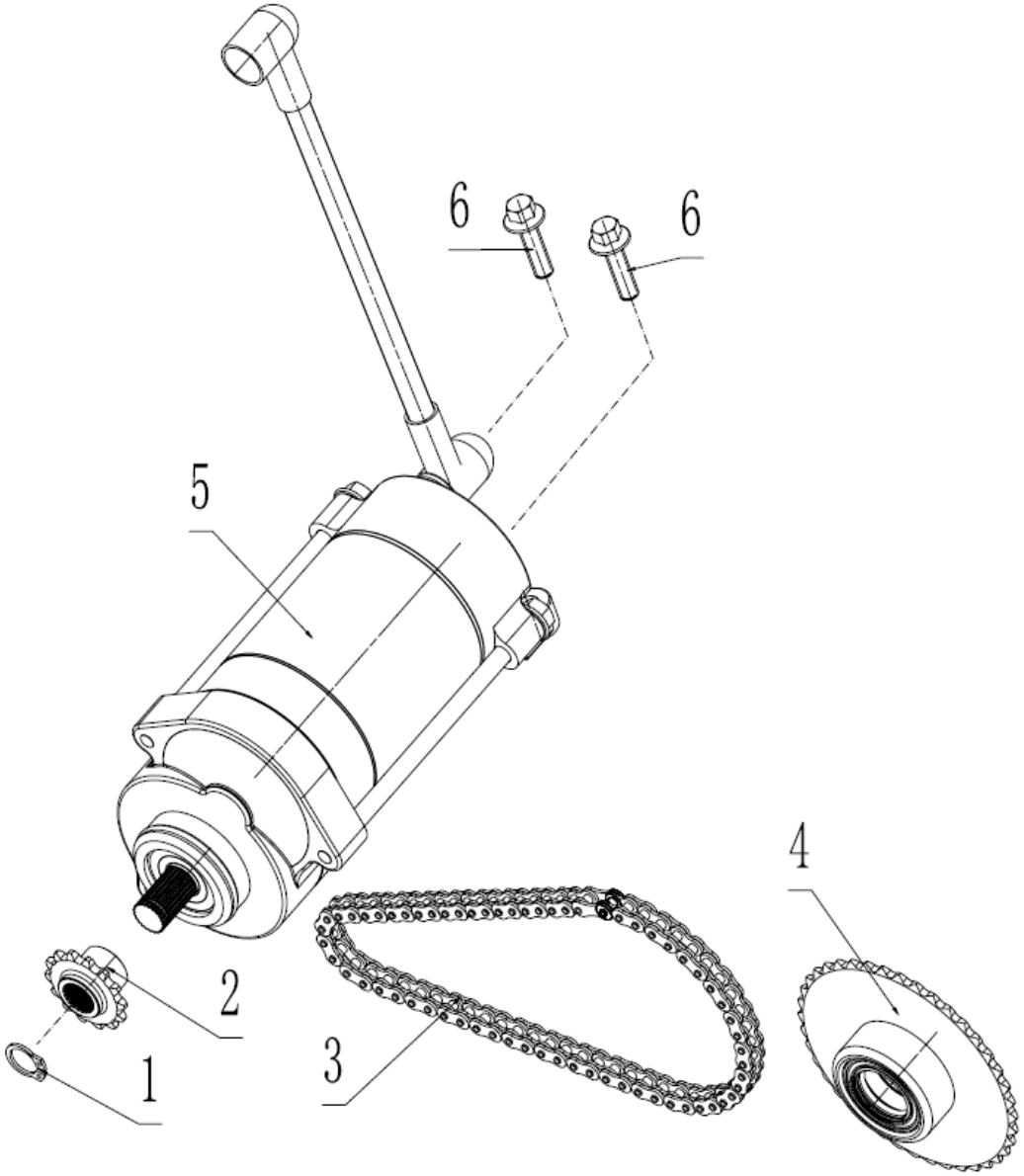

ELECTRIC

NO.	PART CODE	ENGLISH DESCRIPTION	QTY
1	100204266-0006	Ignition Coil	1
2	100204310	C.D.I	1
3	100205413	Rectifier	1
4	100205381	Relay	1

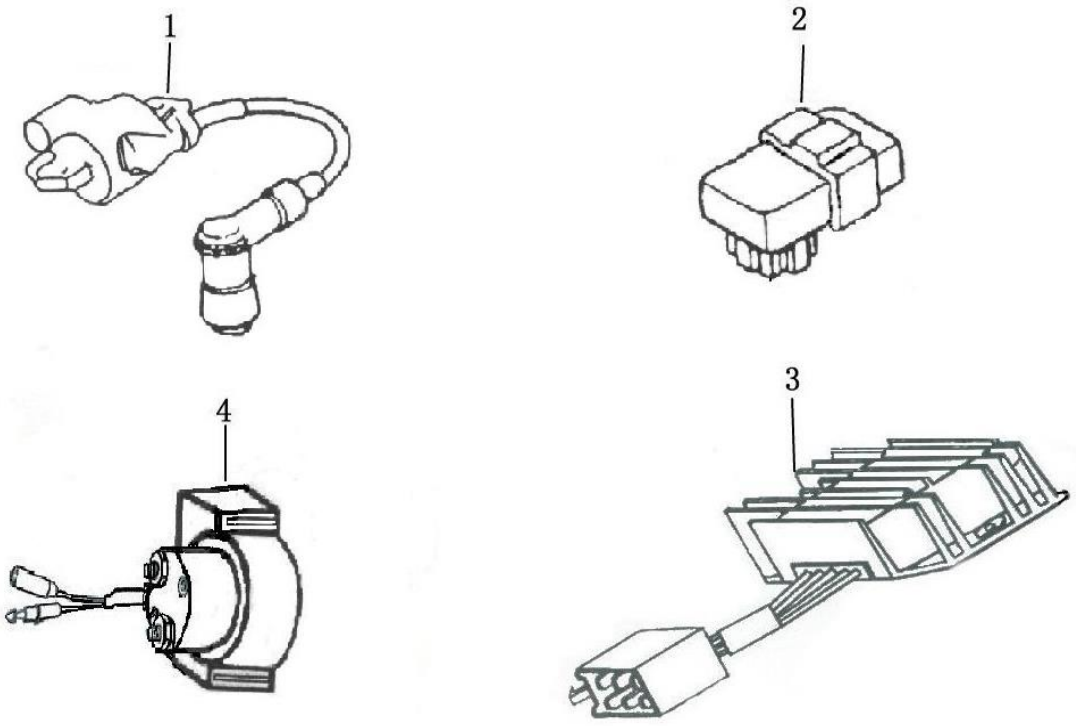

INLET SYSTEM
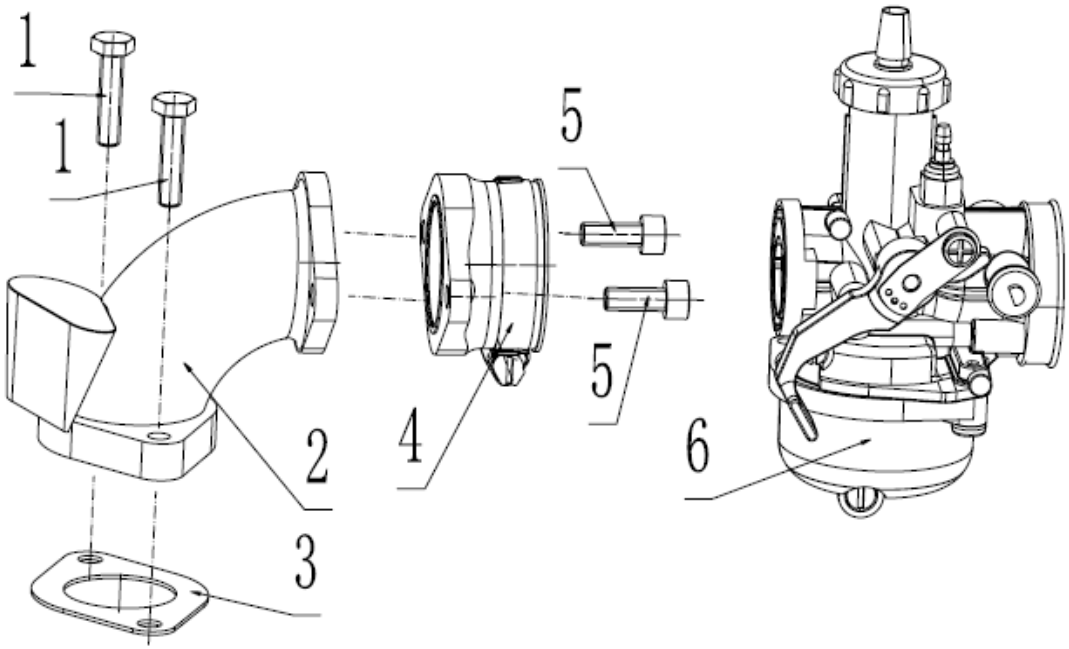
NO.	PART CODE	ENGLISH DESCRIPTION	QTY
1	100011175-0007	Bolt, M6×25	2
2	100201072	Inlet Pipe	1
3	100201151	Gasket Inlet Pipe	1
4	100061525	Intake Manifold	1
5	100010837-0002	Bolt, M6×16	2
6	100061653	Carburetor	1