REVISED DATE 19 January, 2012

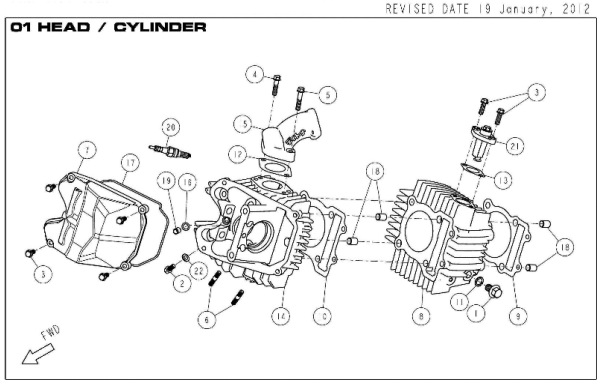

AREA	Ref No.	150FSM 4 SPEED	190FSM 4 SPEED	190FS5 5 SPEED	190FE e-start	Part No.	DESCRIPTION	QTY
01 HEAD / CYLINDER	1	●	●	●	●	86448	BOLT, HEXAGON FLANGE M10x16	1
01 HEAD / CYLINDER	2	●	●	●	●	85877	BOLT, HEXAGON FLANGE M6x12	1
01 HEAD / CYLINDER	3	●	●	●	●	86468	BOLT, HEXAGON FLANGE M6x18	6
01 HEAD / CYLINDER	4	●	●	●	●	86466	BOLT, HEXAGON FLANGE M6x25	1
01 HEAD / CYLINDER	5	●	●	●	●	86471	BOLT, HEXAGON FLANGE M6x30	1
01 HEAD / CYLINDER	6	●	●	●	●	83703	BOLT, STUD M6x32	2
01 HEAD / CYLINDER	7	●	●	●		86367	COVER, CYLINDER HEAD	1
01 HEAD / CYLINDER	7				●	88250	COVER, CYLINDER HEAD, BLACK	1
01 HEAD / CYLINDER	8				●	89237	CYLINDER	1
01 HEAD / CYLINDER	8	●	●	●		86366	CYLINDER	1
01 HEAD / CYLINDER	9	●	●	●	●	86436	GASKET, BASE CYLINDER	1
01 HEAD / CYLINDER	10	●	●	●	●	86440	GASKET, HEAD CYLINDER	1
01 HEAD / CYLINDER	11	●	●	●	●	86476	GASKET, M10	1
01 HEAD / CYLINDER	12	●	●	●	●	86405	GASKET, MANIFOLD	1
01 HEAD / CYLINDER	13	●	●	●	●	86439	GASKET, TANSIONER CAM CHAIN	1
01 HEAD / CYLINDER	14	●	●	●	●	86368	HEAD, CYLINDER	1
01 HEAD / CYLINDER	15	●	●	●	●	86404	MANIFOLD, INTAKE	1
01 HEAD / CYLINDER	16	●	●	●	●	86479	O-RING	1
01 HEAD / CYLINDER	17	●	●	●	●	86434	O-RING, COVER HEAD	1
01 HEAD / CYLINDER	18	●	●	●	●	83720	PIN, DOWEL Φ10xΦ8.4x14	4
01 HEAD / CYLINDER	19	●	●	●	●	83747	PIN, DOWEL Φ8xΦ6.3x12	1
01 HEAD / CYLINDER	20	●	●	●	●	86429	SPARK PLUG ER9EH-6N	1
01 HEAD / CYLINDER	20	●	●	●	●	87008	SPARK PLUG ER9EH	1
01 HEAD / CYLINDER	21	●	●	●	●	86396	TENSIONER, CAM CHAIN COMP	1
01 HEAD / CYLINDER	22	●	●	●	●	86456	WASHER, Φ6.3xΦ12x1.5	1

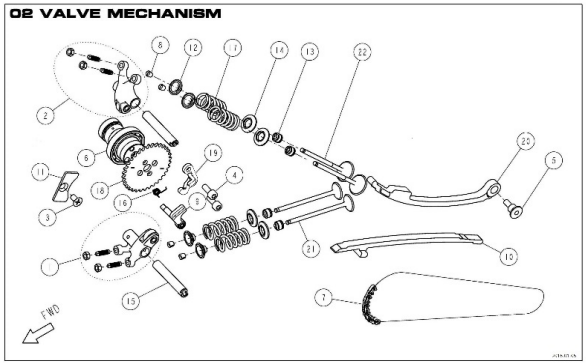

AREA	Ref No.	150FSM 4 SPEED	190FSM 4 SPEED	190FS5 5 SPEED	190FE e-start	Part No.	DESCRIPTION	QTY
02 VALVE MECHANISM	1	●	●	●	●	86481	ARM, ROCKER ROLLER EXHAUST COMP	1
02 VALVE MECHANISM	2	●	●	●	●	86393	ARM, ROCKER ROLLER INTAKE COMP	1
02 VALVE MECHANISM	3	●	●	●	●	86460	BOLT, COUNTERSINK M6x15	1
02 VALVE MECHANISM	4	●	●	●	●	86883	SCREW M6X16	2
02 VALVE MECHANISM	5	●	●	●	●	86447	BOLT, TENSIONER	1
02 VALVE MECHANISM	6				●	87347	CAMSHAFT 00 ROLLER DECOMP ASM	1
02 VALVE MECHANISM	6		●	●		86878	CAMSHAFT 240° ROLLER DECOMP ASM	1
02 VALVE MECHANISM	6	●				87163	CAMSHAFT COMP. 150CC	1
02 VALVE MECHANISM	7	●	●	●	●	86391	CHAIN, CAMSHAFT DRIVE	1
02 VALVE MECHANISM	8	●	●	●	●	86402	COTTER, VALVE	8
02 VALVE MECHANISM	9	●	●	●	●	87622	SHAFT W/WEIGHT,DECOMP. VER2	1
02 VALVE MECHANISM	10	●	●	●	●	86395	GUDE , CHAIN CAMSHAFT	1
02 VALVE MECHANISM	11	●	●	●	●	86389	PLATE, STOPPER CAM	1
02 VALVE MECHANISM	12	●	●	●	●	86400	RETAINER, SPRING VALVE	4
02 VALVE MECHANISM	13	●	●	●	●	86403	SEAL, VALVE STEM Φ4.5	4
02 VALVE MECHANISM	14	●	●	●	●	86401	SEAT, SPRING VALVE	4
02 VALVE MECHANISM	15	●	●	●	●	86392	SHAFT, ROCKER	2
02 VALVE MECHANISM	16	●	●	●	●	87621	SPRING,RETURN DECOMP. VER2	1
02 VALVE MECHANISM	17	●	●	●	●	87343	SPRING, VALVE PLAN-G	4
02 VALVE MECHANISM	18	●	●	●	●	86879	SPROCKET, CAMSHAFT DRIVEN	1
02 VALVE MECHANISM	19	●	●	●	●	87620	PLATE,STOPPER DECOMP. VER2	1
02 VALVE MECHANISM	20	●	●	●	●	86394	TENSIONER, CAM CHAIN	1
02 VALVE MECHANISM	21	●	●	●	●	86623	VALVE, EXHAUST Φ21	2
02 VALVE MECHANISM	22	●	●	●	●	86397	VALVE, INTAKE Φ24.5	2

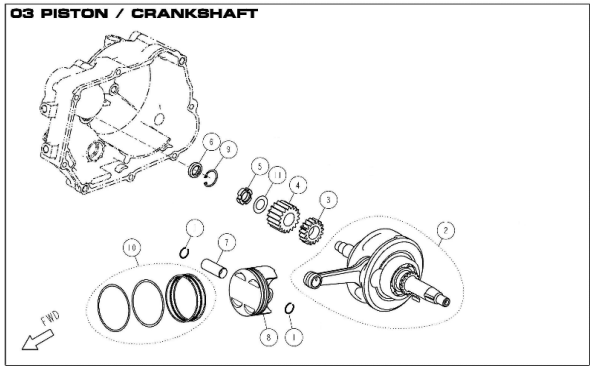

AREA	Ref No.	150FSM 4 SPEED	190FSM 4 SPEED	190FS5 5 SPEED	190FE e-start	Part No.	DESCRIPTION	QTY
03 PISTON / CRANK SHAFT	1	●	●	●	●	86453	CLIP, PIN PISTON	2
03 PISTON / CRANK SHAFT	2				●	88421	CRANK SHAFT ASSY DT190FE	1
03 PISTON / CRANK SHAFT	2			●		89144	CRANKSHAFT CONNECTING-ROD	1
03 PISTON / CRANK SHAFT	2		●			86620	CRANKSHAFT CONNECTING-ROD	1
03 PISTON / CRANK SHAFT	2	●				86381	CRANKSHAFT CONNECTING-ROD	1
03 PISTON / CRANK SHAFT	3	●	●	●	●	86383	GEAR, OIL PUMP DRIVE	1
03 PISTON / CRANK SHAFT	4	●	●	●	●	86415	GEAR, PRIMARY DRIVE	1
03 PISTON / CRANK SHAFT	5	●	●	●	●	83768	NUT, SMALL M14	1
03 PISTON / CRANK SHAFT	6	●	●	●	●	86443	OIL SEAL, Φ12xΦ20x5t	1
03 PISTON / CRANK SHAFT	7	●	●	●	●	86379	PIN, PISTON Φ14	1
03 PISTON / CRANK SHAFT	8		●	●	●	86621	PISTON DT190	1
03 PISTON / CRANK SHAFT	8	●				86378	PISTON DT150	1
03 PISTON / CRANK SHAFT	9	●	●	●	●	86462	RETAINING RING, RTWN22	1
03 PISTON / CRANK SHAFT	10	●	●	●	●	86380	RING SET, PISTON	1
03 PISTON / CRANK SHAFT	11	●	●	●	●	86411	WASHER, SPRING	1
03 PISTON / CRANK SHAFT						87353	TIMING DRIVEN SPROCKET	1

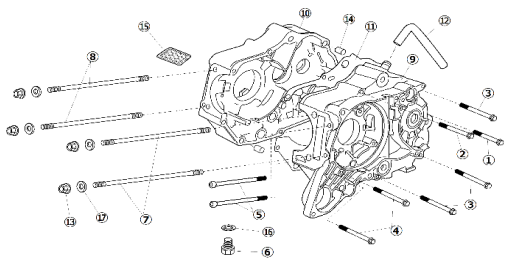

AREA	Ref No.	150FSM 4 SPEED	190FSM 4 SPEED	190FS5 5 SPEED	190FE e-start	Part No.	DESCRIPTION	QTY
04 CRANKCASE	1				●	86474	BOLT, HEXAGON FLANGE M6x55	1
04 CRANKCASE	2				●	83761	BOLT, HEXAGON FLANGE M6x65	1
04 CRANKCASE	3				●	86360	BOLT, HEXAGON FLANGE M6x70	3
04 CRANKCASE	4				●	88864	BOLT, HEXAGON FLANGE M6x80	2
04 CRANKCASE	5				●	86459	BOLT, HEXAGON SOCKET M6x108	2
04 CRANKCASE	6				●	83755	BOLT, OIL DRAIN M12x15	1
04 CRANKCASE	7				●	86444	BOLT, STUD A	2
04 CRANKCASE	8				●	86445	BOLT, STUD B	2
04 CRANKCASE	9				●	88847	CRANKCASE,LH ANIMA FE	1
04 CRANKCASE	10				●	88848	CRANKCASE,RH ANIMA FE	1
04 CRANKCASE	11				●	86438	GASKET, CRANKCASE	1
04 CRANKCASE	12				●	86371	HOSE, BREATHER	1
04 CRANKCASE	13				●	86451	NUT FLANGE, M8	4
04 CRANKCASE	14				●	83720	PIN, DOWEL Φ10xΦ8.4x14	2
04 CRANKCASE	15				●	83751	OIL FILTER SCREEN	1
04 CRANKCASE	16				●	83754	WASHER, OIL DRAIN M12	1
04 CRANKCASE	17				●	86457	WASHER, GASKET M8	4
04 CRANKCASE					●	88870	BOLT, M6X12	1
04 CRANKCASE					●	88871	PLATE, START CLUTCH	1

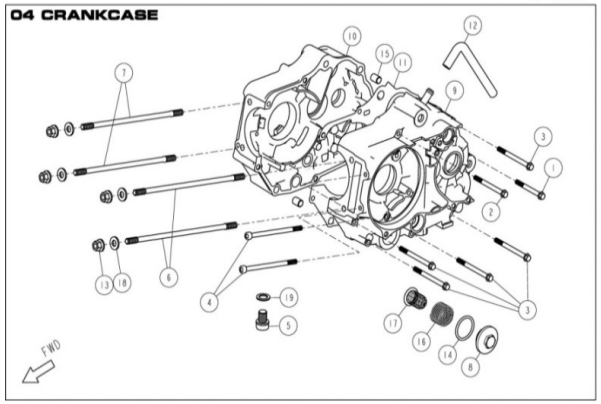

AREA	Ref No.	150FSM 4 SPEED	190FSM 4 SPEED	190FS5 5 SPEED	190FE e-start	Part No.	DESCRIPTION	QTY
04 CRANKCASE	1	●	●	●		86474	BOLT, HEXAGON FLANGE M6x55	1
04 CRANKCASE	2	●	●	●		83761	BOLT, HEXAGON FLANGE M6x65	1
04 CRANKCASE	3	●	●	●		86360	BOLT, HEXAGON FLANGE M6x70	5
04 CRANKCASE	4	●	●	●		86459	BOLT, HEXAGON SOCKET M6x108	2
04 CRANKCASE	5	●	●	●		83755	BOLT, OIL DRAIN M12x15	1
04 CRANKCASE	6	●	●	●		86444	BOLT, STUD A	2
04 CRANKCASE	7	●	●	●		86445	BOLT, STUD B	2
04 CRANKCASE	8	●	●	●		86369	COVER, STRAINER OIL	1
04 CRANKCASE	9			●		89143	CRANK CASE, LH	1
04 CRANKCASE	9	●	●			86370	CRANK CASE, LH	1
04 CRANKCASE	10			●		88848	CRANK CASE, RH	1
04 CRANKCASE	10	●	●			86884	CRANK CASE, RH	1
04 CRANKCASE	11	●	●	●		86438	GASKET, CRANKCASE	1
04 CRANKCASE	12	●	●	●		86371	HOSE, BREATHER	1
04 CRANKCASE	13	●	●	●		86451	NUT FLANGE, M8	4
04 CRANKCASE	14	●	●	●		86433	O-RING, Φ30xΦ3	1
04 CRANKCASE	15	●	●	●		83720	PIN, DOWEL Φ10xΦ8.4x14	2
04 CRANKCASE	16	●	●	●		86385	SPRING, STRAINER	1
04 CRANKCASE	17	●	●	●		86387	STRAINER, OIL	1
04 CRANKCASE	18	●	●	●		86457	WASHER, GASKET M8	4
04 CRANKCASE	19	●	●	●		83754	WASHER, OIL DRAIN M12	1

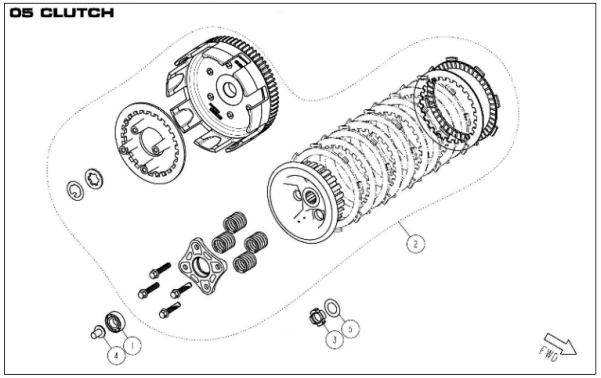

AREA	Ref No.	150FSM 4 SPEED	190FSM 4 SPEED	190FS5 5 SPEED	190FE e-start	Part No.	DESCRIPTION	QTY
05 CLUTCH	1	●	●	●	●	83786	BEARING, #6000	1
05 CLUTCH	2	●	●	●	●	87619	CLUTCH COMP, W/FORGED GEAR	1
05 CLUTCH	3	●	●	●	●	83768	NUT, SMALL M14	1
05 CLUTCH	4	●	●	●	●	83787	PIN, LIFTER CLUTCH	1
05 CLUTCH	5	●	●	●	●	86410	WASHER, SPRING Φ24xΦ14.2x1.2	1

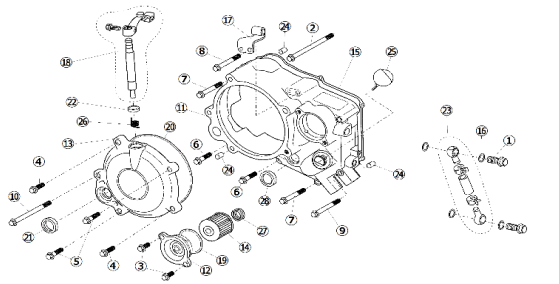

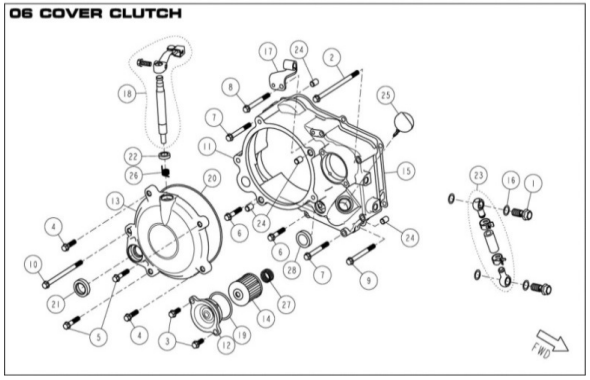

AREA	Ref No.	150FSM 4 SPEED	190FSM 4 SPEED	190FS5 5 SPEED	190FE e-start	Part No.	DESCRIPTION	QTY
06 COVER CLUTCH	1	●	●	●	●	86446	BOLT, BANJO M10x22.5	2
06 COVER CLUTCH	2	●	●	●	●	88862	BOLT, HEXAGON FLANGE M6x115	1
06 COVER CLUTCH	3	●	●	●	●	86486	BOLT, HEXAGON FLANGE M6x15	2
06 COVER CLUTCH	4	●	●	●	●	86469	BOLT, HEXAGON FLANGE M6x22	2
06 COVER CLUTCH	5	●	●	●	●	86485	BOLT, HEXAGON FLANGE M6x28	2
06 COVER CLUTCH	6	●	●	●	●	86471	BOLT, HEXAGON FLANGE M6x30	2
06 COVER CLUTCH	7	●	●	●	●	86473	BOLT, HEXAGON FLANGE M6x50	2
06 COVER CLUTCH	8	●	●	●	●	86474	BOLT, HEXAGON FLANGE M6x55	1
06 COVER CLUTCH	9	●	●	●	●	83759	BOLT, HEXAGON FLANGE M6x60	1
06 COVER CLUTCH	10	●	●	●	●	86361	BOLT, HEXAGON FLANGE M6x90	1
06 COVER CLUTCH	11				●	88863	COVER, CLUTCH	1
06 COVER CLUTCH	11	●	●	●		86376	COVER, CLUTCH	1
06 COVER CLUTCH	12	●	●	●	●	86374	COVER, OIL FILTER	1
06 COVER CLUTCH	13	●	●	●	●	86377	COVER, SMALL CLUTCH	1
06 COVER CLUTCH	14	●	●	●	●	86384	FILTER, OIL	1
06 COVER CLUTCH	15	●	●	●	●	86437	GASKET, COVER CLUTCH	1
06 COVER CLUTCH	16	●	●	●	●	86476	GASKET, M10	4
06 COVER CLUTCH	17	●	●	●	●	86412	HOLDER, CABLE CLUTCH	1
06 COVER CLUTCH	18	●	●	●	●	86414	LEVER, CLUTCH COMP	1
06 COVER CLUTCH	19	●	●	●	●	86432	O-RING, Φ38.6x2.6	1
06 COVER CLUTCH	20	●	●	●	●	86435	O-RING, COVER SMALL CLUTCH	1
06 COVER CLUTCH	21	●	●	●	●	86441	OIL SEAL, Φ16xΦ26x7	1
06 COVER CLUTCH	22	●	●	●	●	86442	OIL SEAL, Φ17xΦ10x5	1
06 COVER CLUTCH	23	●	●	●	●	86406	OIL THROUGH COMP	2
06 COVER CLUTCH	24	●	●	●	●	83747	PIN, DOWEL Φ8xΦ6.3x12	4
06 COVER CLUTCH	25	●	●	●	●	86386	RULER	1
06 COVER CLUTCH	26	●	●	●	●	86413	SPRING, LEVER CLUTCH	1
06 COVER CLUTCH	27	●	●	●	●	86375	SPRING, OIL FILTER	1
06 COVER CLUTCH	28	●	●	●	●	86475	WINDOW, OIL LEVEL	1

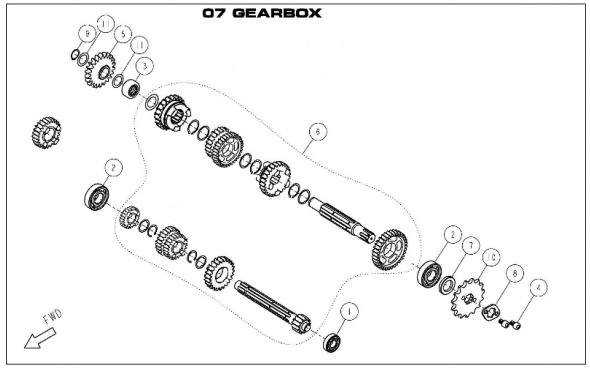

AREA	Ref No.	150FSM 4 SPEED	190FSM 4 SPEED	190FS5 5 SPEED	190FE e-start	Part No.	DESCRIPTION	QTY
07 GEARBOX	1	●	●	●	●	83788	BEARING #6001	1
07 GEARBOX	2	●	●	●	●	83795	BEARING #6203	2
07 GEARBOX	3	●	●	●	●	86454	BEARING NK152712	1
07 GEARBOX	4	●	●	●	●	86464	BOLT, HEXAGON SOCKET M6x10	2
07 GEARBOX	5	●	●	●	●	86418	GEAR IDLE, STARTER	1
07 GEARBOX	6			●	●	88422	GEAR, COMP,	1
07 GEARBOX	6	●	●			86919	GEAR, COMP,	1
07 GEARBOX	7	●	●	●	●	83796	OIL SEAL, Φ29xΦ17x5	1
07 GEARBOX	8	●	●	●	●	86420	PLATE, FIXING SPROCKET DRIVE	1
07 GEARBOX	9	●	●	●	●	86463	RETAINING RING Φ13.6	1
07 GEARBOX	10	●	●	●	●	86419	SPROCKET, DRIVE 15T	1
07 GEARBOX	11	●	●	●	●	86455	WASHER, Φ22xΦ15x0.5	2

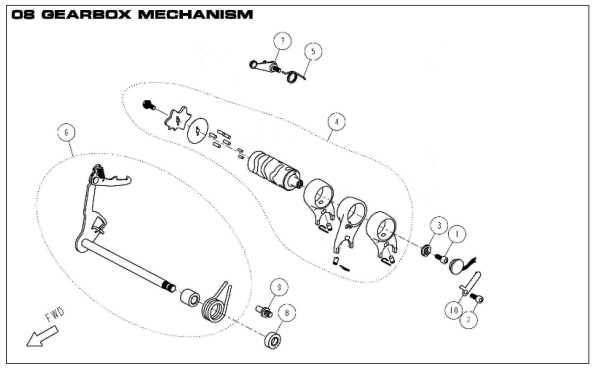

AREA	Ref No.	150FSM 4 SPEED	190FSM 4 SPEED	190FS5 5 SPEED	190FE e-start	Part No.	DESCRIPTION	QTY
08 GEARBOX MECHANISM	1	●	●	●	●	86449	BOLT, HEXAGON SOCKET M6	1
08 GEARBOX MECHANISM	2	●	●	●	●	85877	BOLT, HEXAGON SOCKET M6x15	1
08 GEARBOX MECHANISM	3	●	●	●	●	83833	CONTACT,GEAR INDICATION	1
08 GEARBOX MECHANISM	4			●	●	88423	DRUM, SHIFT 1-N-2-3-4-5 COMP	1
08 GEARBOX MECHANISM	4	●	●			86421	DRUM, SHIFT N-1-2-3-4 COMP	1
08 GEARBOX MECHANISM	5			●	●	88424	SPRING, LOCATING PLATE	1
08 GEARBOX MECHANISM	5	●	●			86423	SPRING, LOCATING PLATE	1
08 GEARBOX MECHANISM	6			●	●	88886	LEVER, GEAR SHIFT COMP	1
08 GEARBOX MECHANISM	6	●	●			86915	LEVER, GEAR SHIFT COMP	1
08 GEARBOX MECHANISM	7	●	●	●	●	86424	LOCATING PLATE UNIT	1
08 GEARBOX MECHANISM	8	●	●	●	●	83837	OIL SEAL, Φ11.6xΦ24x10	1
08 GEARBOX MECHANISM	9	●	●	●	●	86480	PIN, LOCATING SHIFT LEVER	1
08 GEARBOX MECHANISM	10	●	●	●	●	85876	PLATE, LOCATING SWITCH NEUTRAL	1

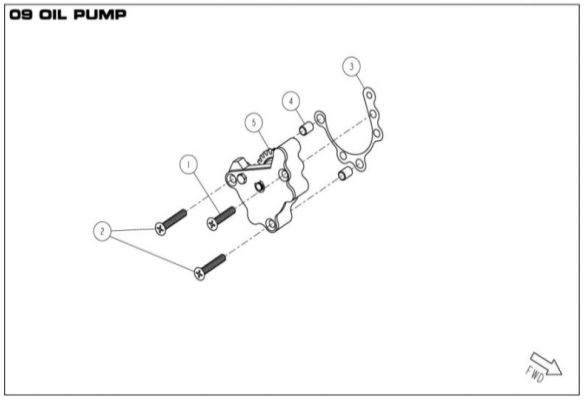

AREA	Ref No.	150FSM 4 SPEED	190FSM 4 SPEED	190FS5 5 SPEED	190FE e-start	Part No.	DESCRIPTION	QTY
09 OIL PUMP	1	●	●	●	●	84678	BOLT, CROSS RECESSED COUNTERSUNK M6x30	1
09 OIL PUMP	2	●	●	●	●	84677	BOLT, CROSS RECESSED COUNTERSUNK M6x35	2
09 OIL PUMP	3	●	●	●	●	84676	GASKET, PUMP OIL	1
09 OIL PUMP	4	●	●	●	●	83747	PIN, DOWEL Φ8xΦ6.3x12	2
09 OIL PUMP	5	●	●	●	●	86382	PUMP, OIL ASSY	1

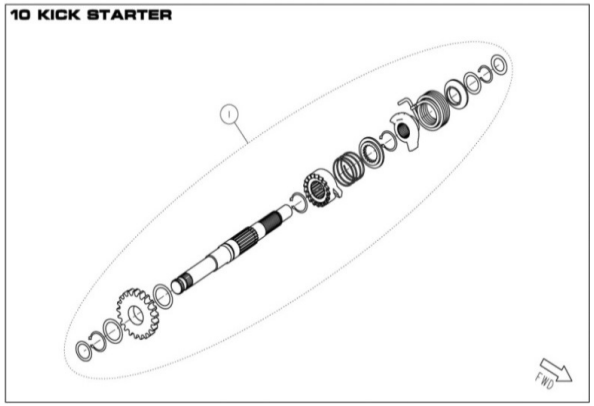

AREA	Ref No.	150FSM 4 SPEED	190FSM 4 SPEED	190FS5 5 SPEED	190FE e-start	Part No.	DESCRIPTION	QTY
10 KICK STARTER	1			●	●	88883	KICK STARTING SHAFT ASSY	1
10 KICK STARTER	1	●	●			86407	KICK STARTING SHAFT ASSY	1

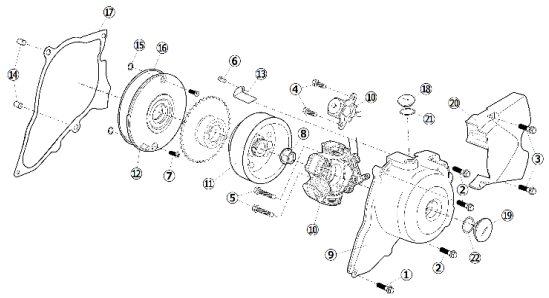

AREA	Ref No.	150FSM 4 SPEED	190FSM 4 SPEED	190FS5 5 SPEED	190FE e-start	Part No.	DESCRIPTION	QTY
11 GENERATOR	1				●	86470	BOLT, M6X25	1
11 GENERATOR	2				●	88877	BOLT, M6X35	3
11 GENERATOR	3				●	88881	BOLT, M6X28	2
11 GENERATOR	4				●	88890	BOLT, M5X12	2
11 GENERATOR	5				●	86470	BOLT, M6X25	2
11 GENERATOR	6				●	88873	BOLT, M6X16	1
11 GENERATOR	7				●	86461	BOLT, CROSS RECESSED COUNTERSUNK M6x15	2
11 GENERATOR	8				●	88889	NUT	1
11 GENERATOR	9				●	88878	MAGNET COVER(SHOT BLAST)	1
11 GENERATOR	10				●	88425	STATOR ASSY MAGNETO	1
11 GENERATOR	11				●	88887	ROTOR ASSY, MAGNET	1
11 GENERATOR	12				●	88872	DISK INSULATOR	1
11 GENERATOR	13				●	88874	FIXING PLATE	1
11 GENERATOR	14				●	83747	PIN, DOWEL Φ8xΦ6.3x12	2
11 GENERATOR	15				●	86479	O-RING, Φ6.5xΦ1.8	2
11 GENERATOR	16				●	84222	O-RING, Φ110xΦ2.0	1
11 GENERATOR	17				●	88410	GASKET L.CRANKCASE COVER	1
11 GENERATOR	18				●	88875	CAP, SMALL HOLE	1
11 GENERATOR	19				●	88880	CAP, BIG HOLE	1
11 GENERATOR	20				●	88882	SPROCKET COVER	1
11 GENERATOR	21				●	88876	O-RING, 13.2X2.65	1
11 GENERATOR	22				●	88879	O-RING, 27.4X2.65	1

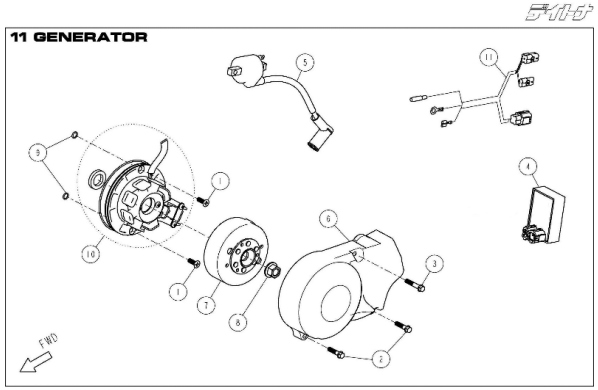

AREA	Ref No.	150FSM 4 SPEED	190FSM 4 SPEED	190FS5 5 SPEED	190FE e-start	Part No.	DESCRIPTION	QTY
11 GENERATOR	1	●	●	●		86461	BOLT, CROSS RECESSED COUNTERSUNK M6x15	2
11 GENERATOR	2	●	●	●		86464	BOLT, HEXAGON FLANGE M6x25	2
11 GENERATOR	3	●	●	●		86472	BOLT, HEXAGON FLNAGE M6x32	1
11 GENERATOR	4	●	●	●		88130	CDI, FSM	1
11 GENERATOR	4					87348	C.D.I, FD-11500RPM-P3	1
11 GENERATOR	5	●	●	●		86426	COIL, IGN ITION	1
11 GENERATOR	6	●	●	●		86373	COVER, MAGNET	1
11 GENERATOR	7	●	●	●		88127	ROTOR, 775 FSM	1
11 GENERATOR						86431	ROTOR ASSY, MAGNETO	1
11 GENERATOR	8	●	●	●		86452	NUT, MAGNET M12	1
11 GENERATOR	9	●	●	●		86479	O-RING, Φ6.5xΦ1.8	2
11 GENERATOR	10	●	●	●		88129	STATOR COIL, FSM	1
11 GENERATOR	10					86430	STATOR ASSY, WITH LIGHT SYSTEM	1
11 GENERATOR	11					86428	WIRE HERNESS,	1
11 GENERATOR	11	●	●	●		86917	WIRE HARNESS, W/O LIGHT SYSTEM	1
11 GENERATOR	12					87189	REGULATE RECTIFIER	1

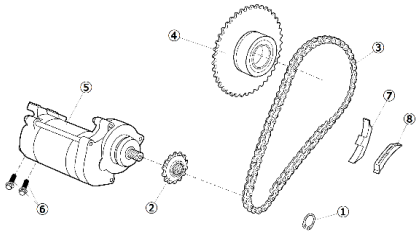

AREA	Ref No.	150FSM 4 SPEED	190FSM 4 SPEED	190FS5 5 SPEED	190FE e-start	Part No.	DESCRIPTION	QTY
12 ELECTRICAL STARTER	1				●	88891	RETAINING RING, 11	1
12 ELECTRICAL STARTER	2				●	88892	SPROCKET	1
12 ELECTRICAL STARTER	3				●	88427	STARTING MOTOR DRIVE CHAIN	1
12 ELECTRICAL STARTER	4				●	88893	PLATE GEAR ASSY	1
12 ELECTRICAL STARTER	5				●	88426	STARTING MOTOR ASSY	1
12 ELECTRICAL STARTER	6				●	88894	BOLT, M6X22	2
12 ELECTRICAL STARTER	7				●	88420	GUIDE, PLATE	1
12 ELECTRICAL STARTER	8				●	88419	PLATE, CHAIN	1

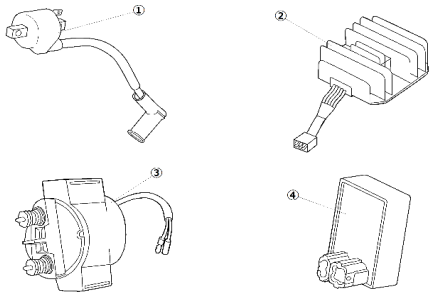

AREA	Ref No.	150FSM 4 SPEED	190FSM 4 SPEED	190FS5 5 SPEED	190FE e-start	Part No.	DESCRIPTION	QTY
13 ELECTRICAL COMPONENT	1				●	86426	COIL, IGN ITION	1
13 ELECTRICAL COMPONENT	2				●	88896	RECTIFIER	1
13 ELECTRICAL COMPONENT	3				●	88897	RELAY	1
13 ELECTRICAL COMPONENT	4				●	88895	CDI	1
OPTIONAL ITEM	OP				●	89416	WIRE HERNESS	(1)